5.165

6.5”/165 MM MID-WOOFER

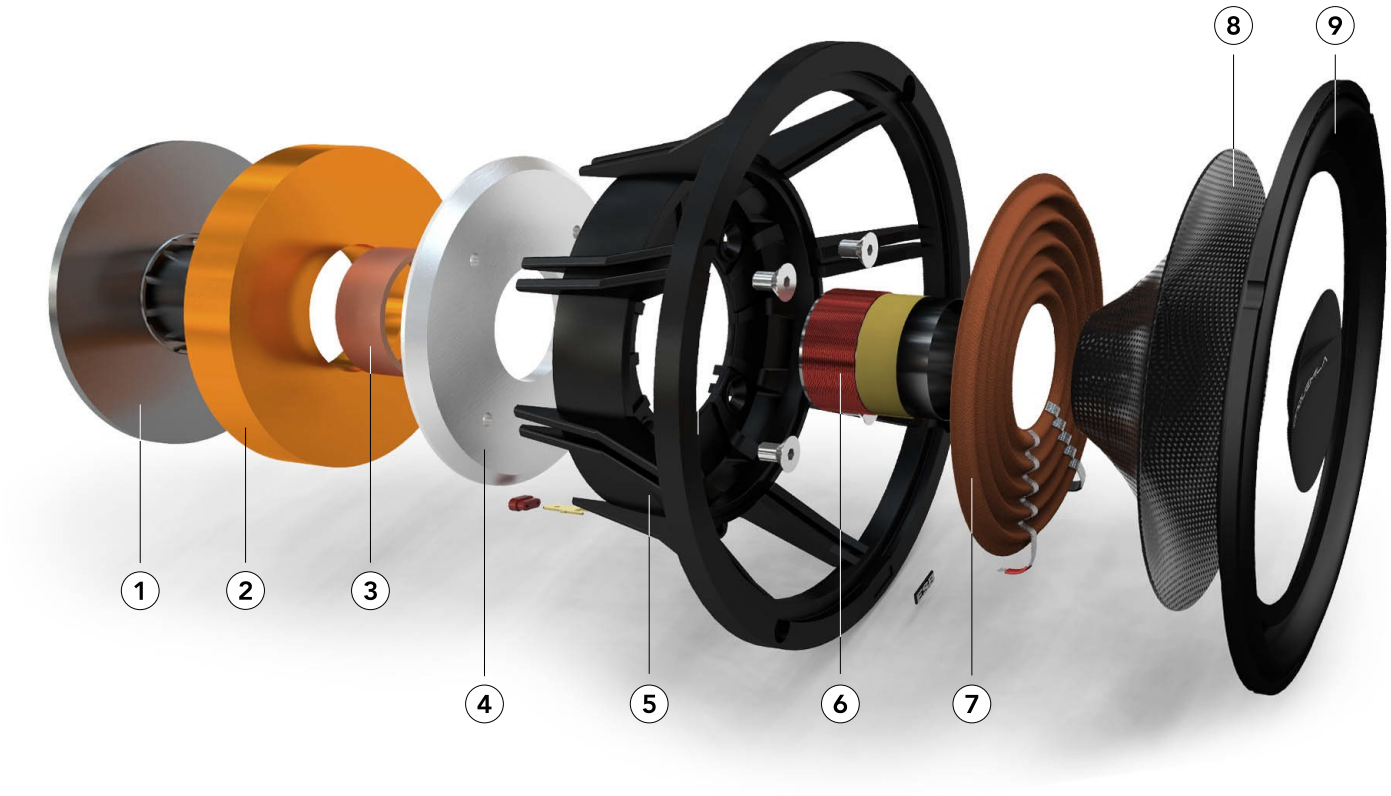

1 Pole cup designed with the help of magnetic flux analysis software. It helped to achieve perfect and homogeneous saturation of the magnetic gap for the benefit of the voice coil stroke always immersed in constant magnetic flux, this reduces distortion and increases dynamics.

2 The Y35 ferrite magnet motor is optimized with FEA simulation to ensure a perfectly symmetrical magnetic flux in both directions of cone’s run. Motor metal parts are CNC machined from solid, refined material for maximum magnetic flux linearity and minimum magnetic loss. This reduces distortion at high power levels.

3 A pure copper ring is inserted into the magnetic field to reduce harmonic distortion.

4 Magnet plate in ultra-low-carbon steel.

5 The eight twin-spoke anti-resonant and self-extinguishing carbon fiber reinforced ABS frame ensures a drastic reduction of the cone's back reflections. This frame design assures high structural and torsional rigidity. This is necessary for perfect parts alignment and very tight construction tolerances.

6 A 25 mm CCAW (Copper Clad Aluminum Wire) double layer voice coil is wound on an aluminum former for exceptional power handling and compression-free reproduction to handle the most demanding musical passages.

7 The large Conex™ spider allows a smooth and gentle run at low excursions and gently holds the cone at high excursions, thus increasing its useful range of use.

8 The carbon fiber reinforced, polymer matrix composite, exponential cone ensures an extraordinary rigidity combined with very low weight.

9 The exclusive TSW (Twin Symmetrical Wave) rubber surround offers maximum linearity of travel and high reliability in extreme conditions.

5.165

6.5”/165 MM MID-WOOFER

Speaker Type: Component Mid-Woofer
Nominal Diameter: 6.5”/165 mm
Nominal Impedance (Znom): 3 Ohms
Continuous Power Handling: 160 W
Peak Power Handling: 320 W
Rec. Amplifier Power: 60 - 280W (RMS)

PARAMETERS

Voice Coil Resistance (Re): 2.5 Ohms
Voice Coil Diameter: 25 mm
Free Air Resonance (Fs): 71.3 Hz
Reference Efficiency (no): 0,57 %
Sensitivity: 92 dB @ 1W/1m
95 dB @ 2.83V/1m
Electrical “Q” (Qes): 0.5
Mechanical “Q” (Qms): 4.0
Total Speaker “Q” (Qts): 0.45
Equivalent Compliance (Vas): 9.47 lt
Moving Mass (Mms): 12.1 g
Mech. Compliance (Cms): 0.4 mm/N
Magnetic Strength (BL): 5.16 N/A
Effective Piston Area (Sd): 130 sq. cm
One-Way Linear Excursion (Xmax): 4.5 mm

DESIGN BANDWIDTH
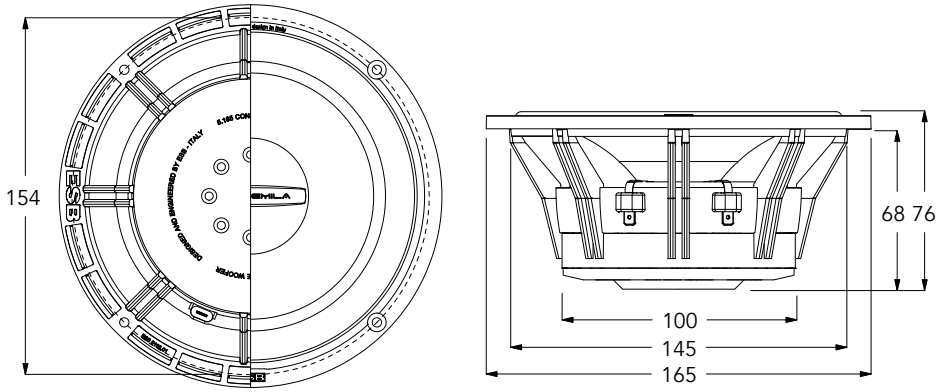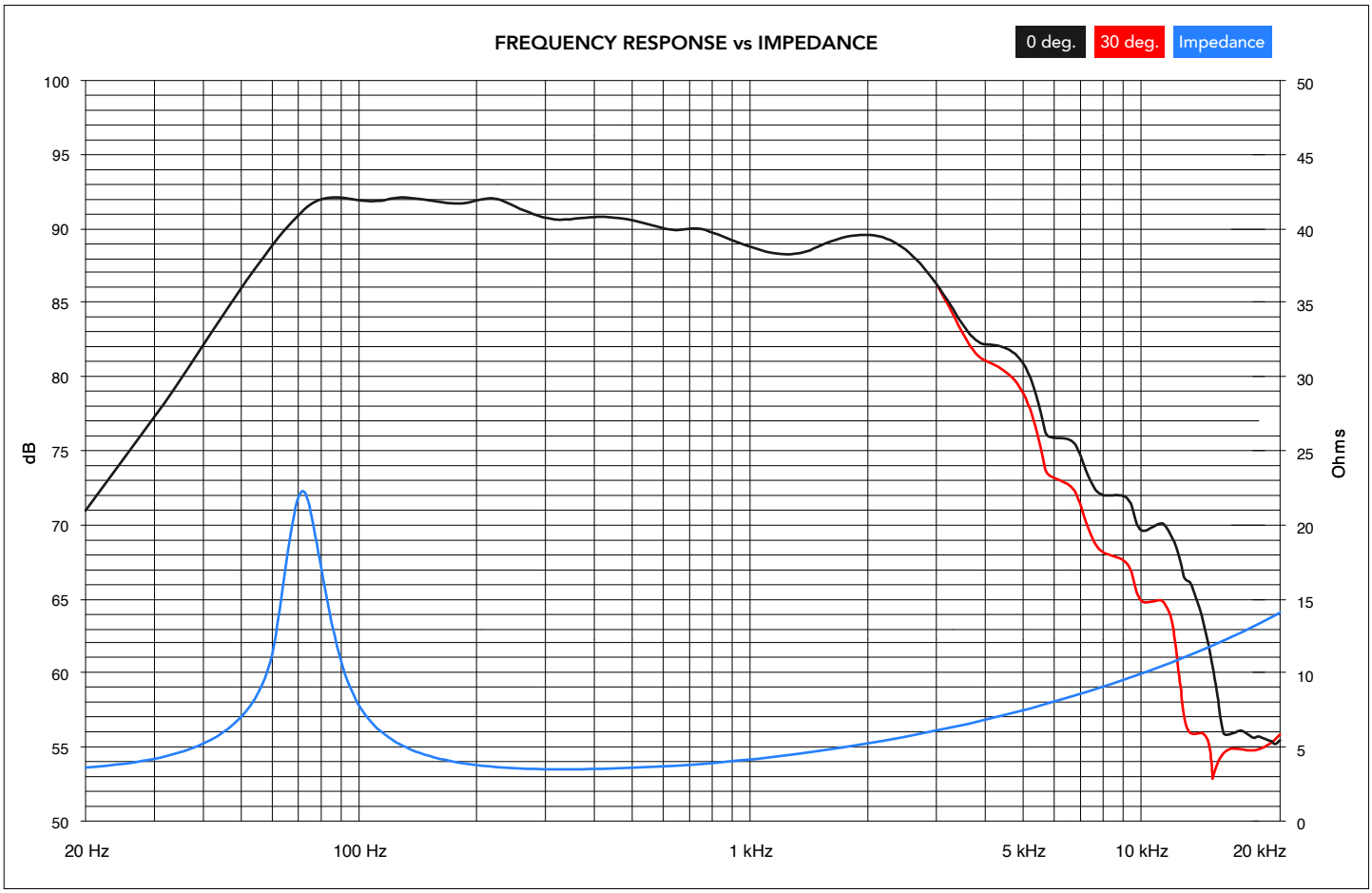
With 48 dB/oct. HP filters: 50 Hz - 4 KHz
With 24 dB/oct. HP filters: 70 Hz - 4 KHz
With 12 dB/oct. HP filters: 80 Hz - 4 KHz